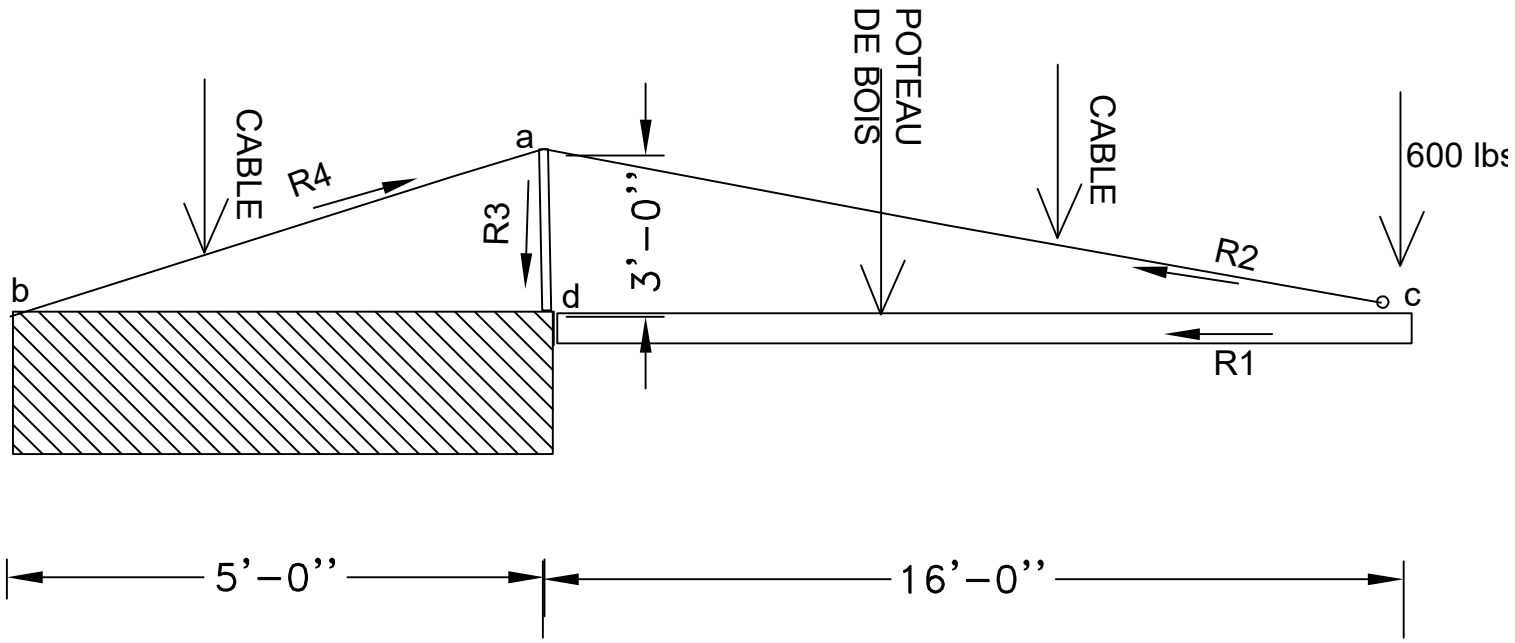
CABLE
R4
a
R3
3'–0''
POTEAU
DE BOIS
CABLE
600 lbs
R2
b
d
c
R1
5'–0''
16'–0''